EXAMPLE 2.7

The figure shows a projectile fired from A to strike a target at D as shown. Determine:

a- The initial velocity of the projectile v_0.
b- The time of flight from A to D.

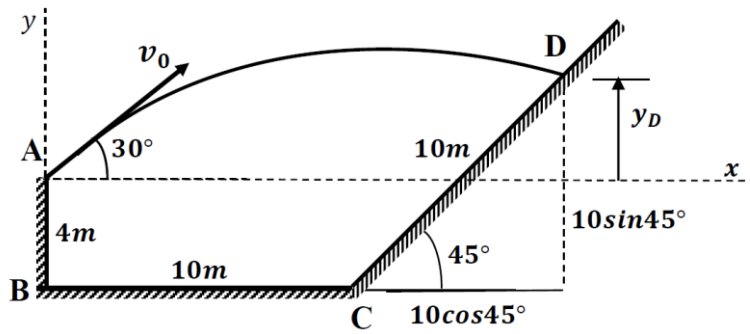

SOLUTION

$\theta = 30°$

$x_D = 10 + 10cos45° = 17.07\ m$

$y_D = 10sin45° - 4 = 3.07\ m$

$$y = xtan\theta - \frac{gx^2}{2{v_0}^2cos^2\theta}$$

$$3.07 = 17.07tan30° - \frac{9.81(17.07)^2}{2{v_0}^2cos^2 30°}$$

$v_0 = 16.75\ m/s$

$$t = \frac{x}{v_0cos\theta} = \frac{17.07}{16.75cos30°} = 1.18\ sec$$

EXAMPLE 2.8

The figure shows a projectile fired from A so that it strikes the wall at B. If the acceleration due to gravity is considered 10 m/s^2 , Determine:

a- The initial velocity v_0.
b- The maximum height of the projectile above the floor h_{max}.
c- The time of flight from A to B.

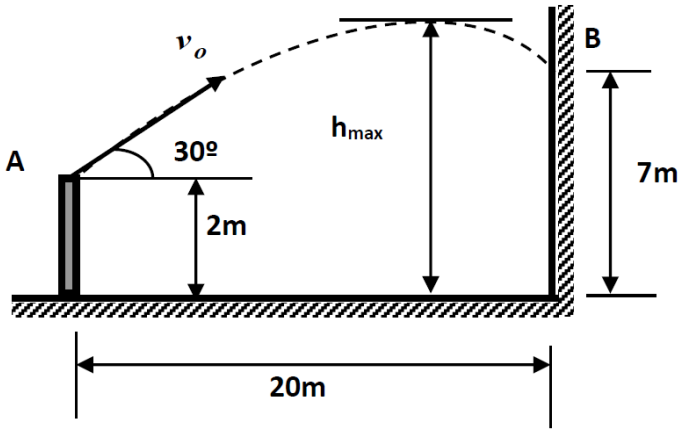

SOLUTION

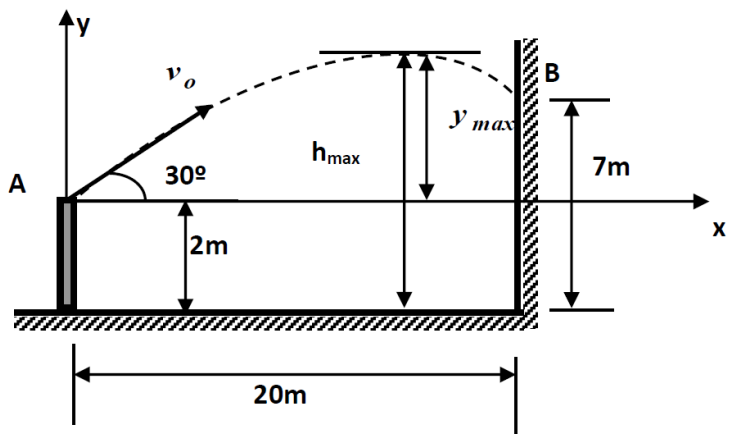

$\theta = 30°$

$x_B = 20\ m$

$y_B = 7 - 2 = 5\ m$

$$y = xtan\theta - \frac{gx^2}{2{v_0}^2cos^2\theta}$$

$$5 = 20tan30° - \frac{9.81(20)^2}{2{v_0}^2cos^2 30°}$$

$v_0 = 20.18\ m/s$

$$y_{max} = \frac{{v_0}^2sin^2\theta}{2g} = \frac{(20.18)^2sin^2 30°}{2 \times 10} = 5.09\ m$$

$h_{max} = 5.09 + 2 = 7.09\ m$

$$t = \frac{x}{v_0cos\theta} = \frac{20}{20.18cos30°} = 1.14\ sec$$

EXAMPLE 2.9

A sack slides off the ramp, shown in Figure, with a horizontal velocity of 12 m/s. If the height of the ramp is 6 m from the floor, determine the time needed for the sack to strike the floor and the range R where sacks begin to pile up.

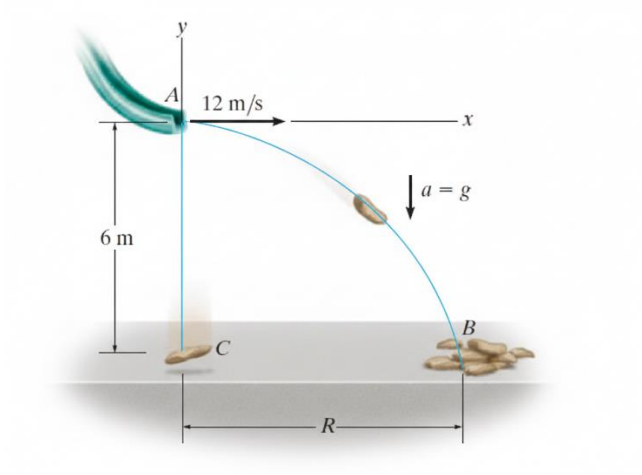

SOLUTION

$v_0 = 12\ m/s$

$\theta = 0°$

$x_B = R$

$y_B = -6\ m$

$$y = xtan\theta - \frac{gx^2}{2{v_0}^2cos^2\theta}$$

$$-6 = Rtan0° - \frac{9.81(R)^2}{2(12)^2cos^2 0°}$$

$R = 13.3\ m = x$

$$t = \frac{x}{v_0cos\theta} = \frac{13.3}{12cos0°} = 1.11\ sec$$

EXAMPLE 2.10

The chipping machine is designed to eject wood chips at v_0 = 8 m/s as shown in Figure. If the tube is oriented at 30° from the horizontal, determine how high, h, the chips strike the pile if at this instant they land on the pile 6.1 m from the tube.

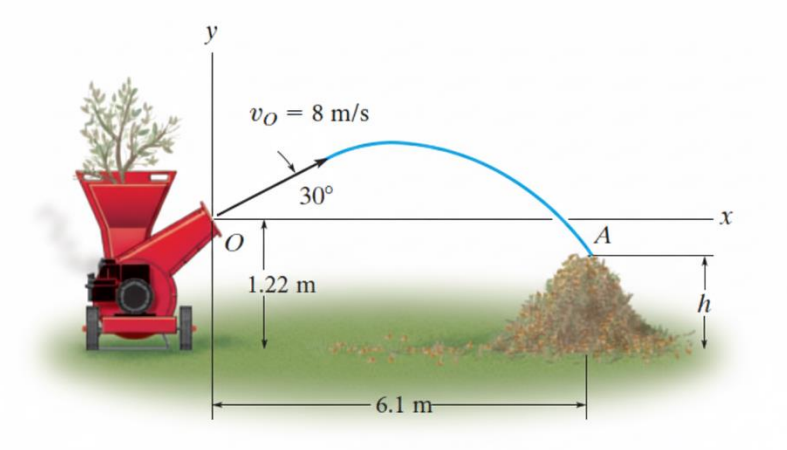

SOLUTION

$v_0 = 8\ m/s$

$\theta = 0°$

$x_A = 6.1\ m$

$y_A = -(1.22 - h)\ m$

$$y = xtan\theta - \frac{gx^2}{2{v_0}^2cos^2\theta}$$

$$-(1.22 - h) = 6.1tan30° - \frac{9.81(6.1)^2}{2(8)^2cos^2 30°}$$

$h = 0.94\ m$

EXAMPLE 2.11

The figure shows a projectile is fired from A to strike a target at B, determine:

a- The initial velocity of the projectile at A.
b- The time of flight from A to B.
c- The velocity of the projectile at B.

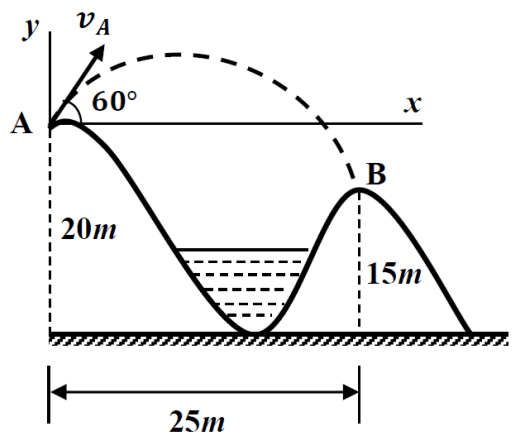

SOLUTION

$v_0 = v_A$

$\theta = 60°$

$x_B = 25\ m$

$y_B = -5\ m$

$$y = xtan\theta - \frac{gx^2}{2{v_0}^2cos^2\theta}$$

$$-5 = 25tan60° - \frac{9.81(25)^2}{2{v_0}^2cos^2 60°}$$

$v_0 = 15.93\ m/s$

$$t = \frac{x}{v_0cos\theta} = \frac{25}{15.93cos60°} = 3.139\ sec$$

$v_x = v_0cos\theta = 15.93cos60° = 7.97\ m/s$

$v_y = v_0sin\theta - gt = 15.93sin60° - 9.81 \times 3.139 = -17\ m/s$

$$v_B = \sqrt{{v_x}^2 + {v_y}^2} = \sqrt{(7.97)^2 + (-17)^2} = 18.78\ m/s$$

EXAMPLE 2.12

The figure shows a projectile is fired from A with an initial velocity $v_A = 40\ m/s$ to strike a target at B on an inclined plane, determine:

a- The range R on the inclined plane.
b- The time of flight from A to B.
c- The velocity of the projectile when it reaches B.

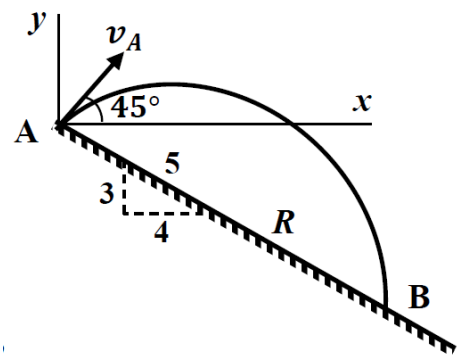

SOLUTION

$v_0 = 40\ m/s$

$\theta = 45°$

$x_B = -\frac{3}{5}R = -0.6R$

$y_B = \frac{4}{5}R = 0.8R$

$y = xtan\theta - \frac{gx^2}{2{v_0}^2cos^2\theta}$

$-0.6R = 0.8Rtan45° - \frac{9.81 \times 0.64R^2}{2(40)^2cos^2 45°}$

$R = 356.8\ m$

$t = \frac{x}{v_0cos\theta} = \frac{0.8(356.8)}{40cos45°} = 10.09\ sec$

$v_x = v_0cos\theta = 40cos45° = 28.28\ m/s$

$v_y = v_0sin\theta - gt = 40sin45° - 9.81 \times 10.09 = -70.7\ m/s$

$v_B = \sqrt{{v_x}^2 + {v_y}^2} = \sqrt{(28.28)^2 + (-70.7)^2} = 76.14\ m/s$

PROBLEMS

2-7 A projectile is fired from A with an initial velocity $v_0 = 40\ m\ /\ s$ in the shown direction to strike a target at B, determine:

a- The range R on the inclined plane.
b- The time of flight from A to B.
c- The velocity of the projectile when it reaches B.

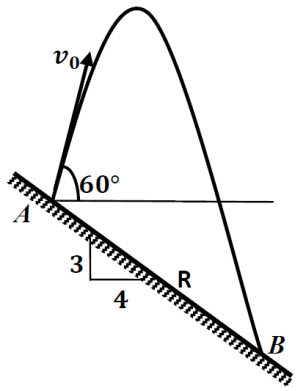

2-8 A projectile is fired from A with an initial velocity v_0 to strike a target at B, determine:

a- The initial velocity v_0.
b- The time of flight from A to B.
c- The velocity of the projectile when it reaches B.

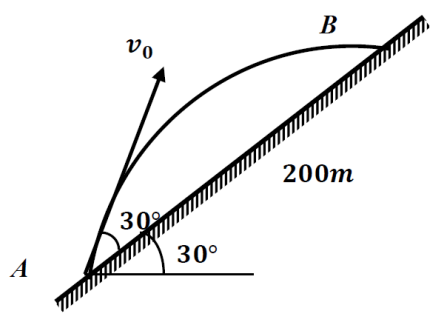

2-9 A projectile is fired from A with an initial velocity v_0 to strike a target at B, determine:

a- The velocity v_0.
b- The time of flight.
c- The velocity of the projectile when it reaches B.

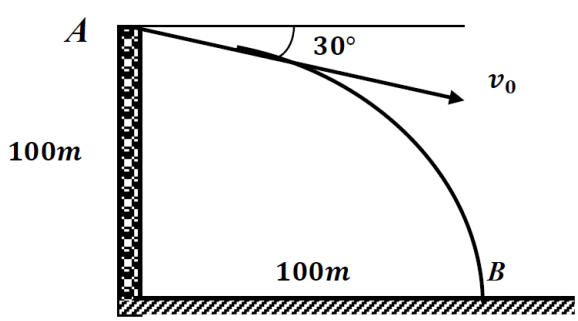

2-10 A projectile is fired from A in the shown direction to strike a target at D, determine:

1- The initial velocity v_0.
2- The time of flight from A to D.
3- The velocity of the projectile at D.

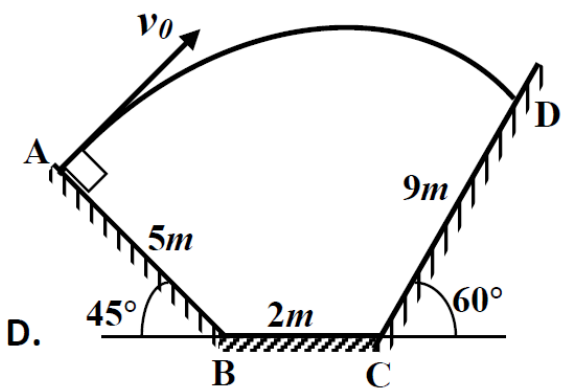

2-11 A projectile is fired from A to strike the vertical wall at B at the maximum height of its trajectory, determine:

1- The initial velocity of the ball at A.
2- The height h of B above the ground.
3- The velocity at B just before striking the wall.

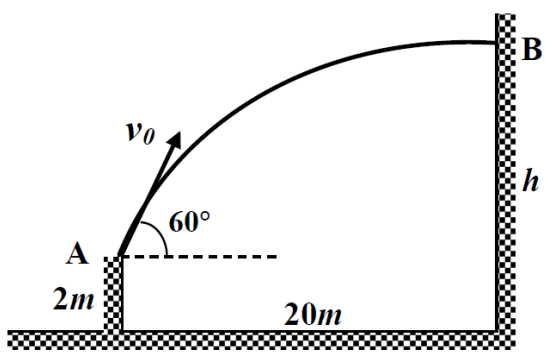
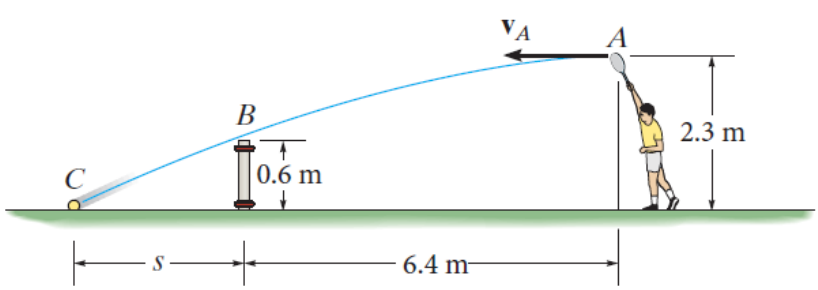
2-12 Determine the horizontal velocity v_A of a tennis ball at A so that it just clears the net at B. Also, find the distance s where the ball strikes the ground.